RS retraction system

Modular retraction system

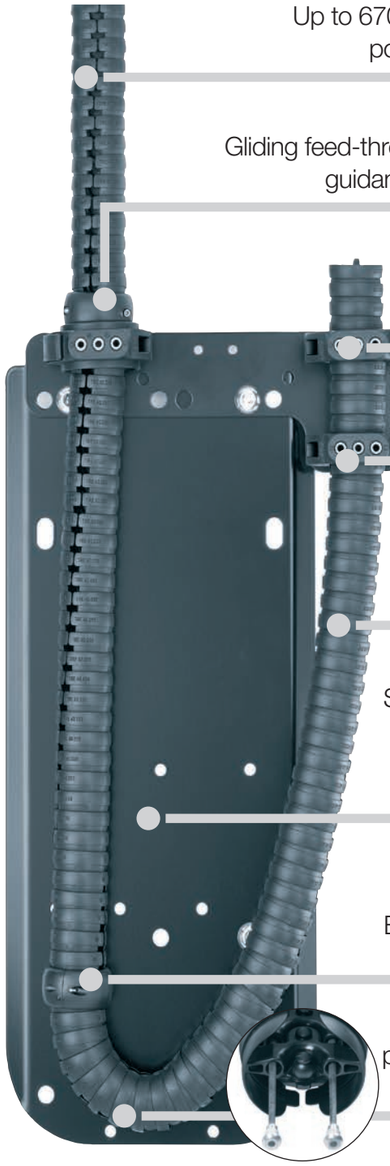

Modular retraction system - triflex® RS

triflex® RS is a retraction system for robots with medium to high payloads. With triflex® RS, the multi-axis triflex® R e-chain® is routed parallel to the robot arm. Integrated fibre rods produce a directed pretension, avoiding the formation of loops in the working area of the robot head. This also allows applications to be implemented in very limited space. triflex® RS offers safe energy supply for tools without stressing the cables, thus minimising downtimes.

- Space-saving, closely routed on the robot arm
- A system solution proven and tested in thousands of applications
- Universal installation
- Integrated fibre-rods - no external mechanical components such as springs or steel cables required!

Video online
► www.igus.co.uk//RS_movie

RS applications

RS - R(etraction) S(ystem)

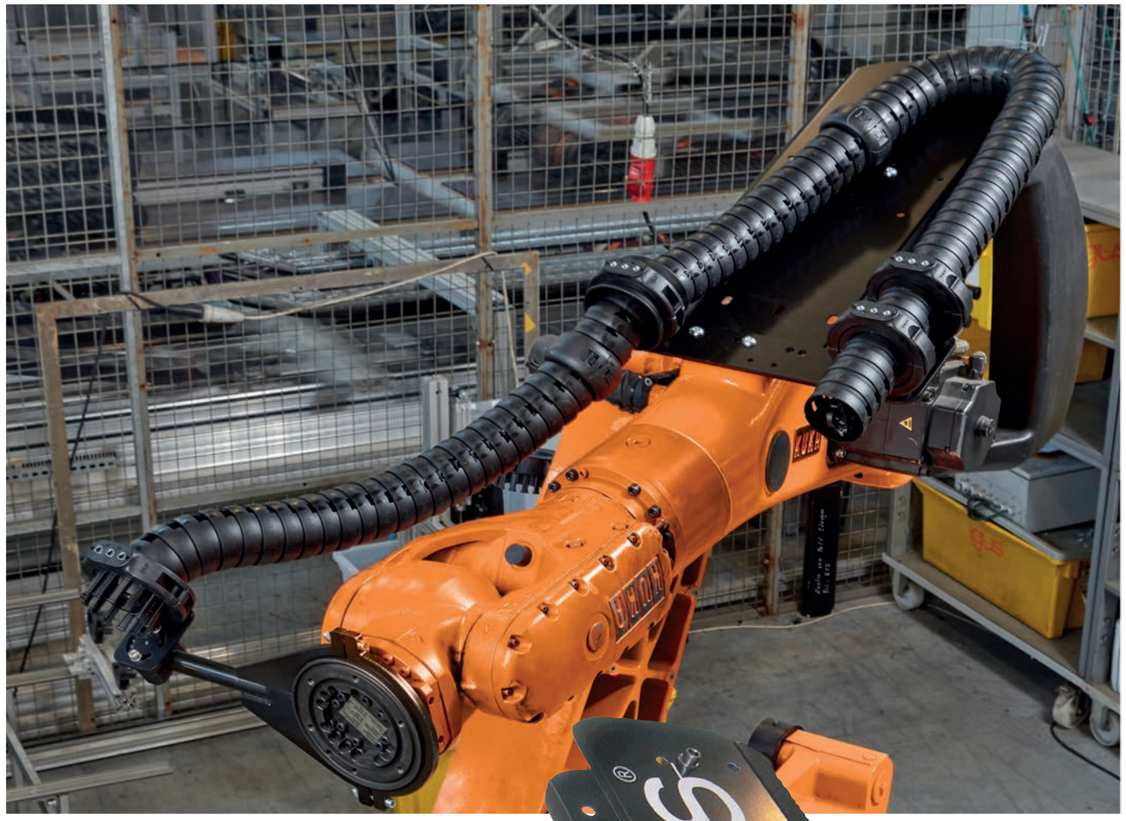

triflex® RS for a low profile retraction system. The triflex® RS retraction unit runs parallel to the robot arm

Option: triflex® RS with cover for more mounting space

RS retraction system

System design with matching e-chain®

Optional cover for additional installation space on the robot: **TR.RS.XX.COVER**

Matching triflex® R e-chains® for RS with integrated fibre-rods
TRC.RS.XX.*R*.LLLL.0
TRE.RS.XX.*R*.LLLL.0.B

RSE linear system (without e-chain®) **+**
Support plate **+**
Mounting bracket **+**
Gliding feed-through **=**
TR.RS.XX.L or **TR.RS.XX.R**

Overall e-chain® length =
additional length from the gliding feed-through **LLLL +**
the e-chain® length within the system

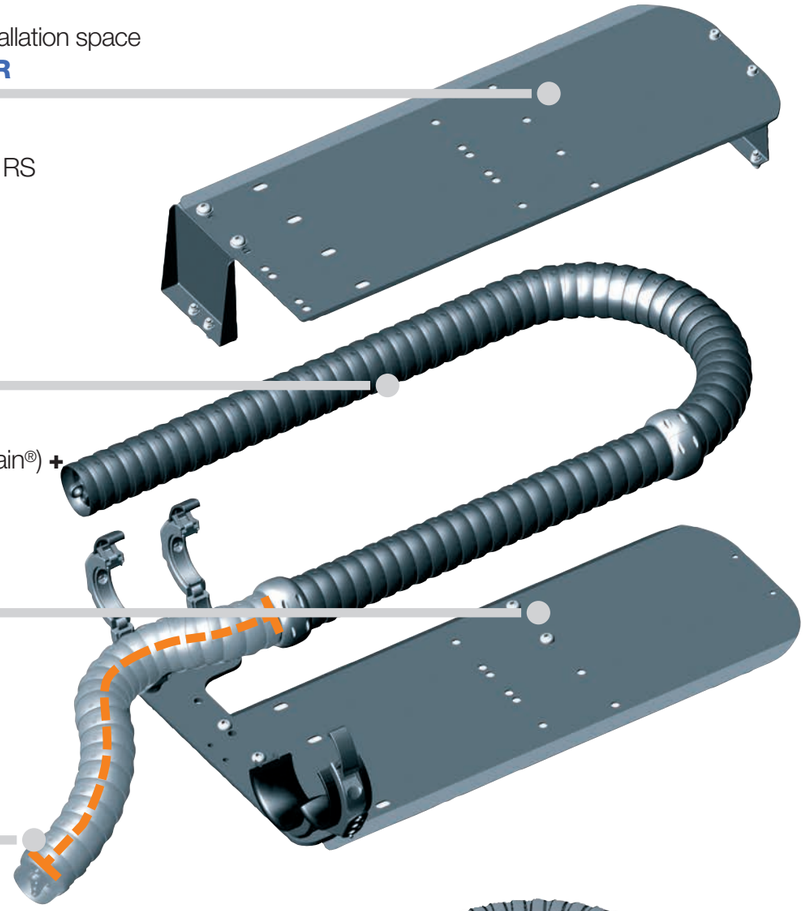

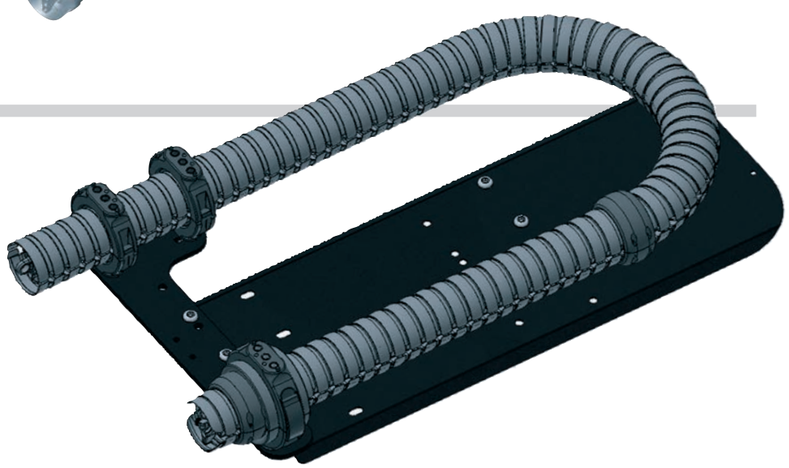

Complete, modular retraction system RS with fixed end left and triflex® R e-chain® TRE series. Mounting bracket and gliding feed-through are included. Please order matching triflex® R e-chain® and optional cover separately.

RS retraction system

Order examples for retraction system including e-chain®

Sample order of a complete TR.RS system, ø-Index 60, fixed end on the left, including cover and e-chain® (standard length: 500mm)

System	Insert Ø index / select fixed end **.L** / **.R**	**TR.RS.60.L**
+ Cover	Insert Ø index (cover optional)	**TR.RS.60.COVER**
+ e-chain®	Insert ø index / Insert bend radius ***R*** / Insert standard length **LLLL**	**TRC.RS.60.087.0500.0**
Order text:	**TR.RS.60.L + TR.RS.60.COVER + TRC.RS.60.087.0500.0**	

Order key retraction system

TR.RS.60.L
TR.RS.60.R

- **L** = Fixed end right or
- **R** = Fixed end left
- Ø index
- Retraction system
- Series

Order key e-chains®

TRC.RS.60.087.0500.0
TRE.RS.60.087.0500.0.B

- Default colour black
- **LLLL** = Additional length
- ***R*** Bend radius
- Ø index
- Retraction system
- e-chain® series

More optional accessories | RS modular retraction system

Cover
For additional installation space and extreme movements
▶ Page 70

Adjustment unit
For accurate adjustment of the system position
▶Page 110

Adapter consoles
for custom mounting options
▶ Page 111

Axis 6 clamp
for triflex® R mounting brackets
▶ Page 114

RS retraction system

Product range

Cover for additional installation space, optional

Product range | RS modular retraction system

Ø Index	Part No. fixed end **left**	Part No. fixed end **right**	Retraction length[1] ≤ [mm]	A [mm]	B [mm]	C [mm]	D [mm]	Weight [kg]
30.	–	–	–	–	–	–	–	–
40.	TR.RS.40.L	TR.RS.40.R	460	576	301	95	51	3.5
50.	–	–	–	–	–	–	–	–
60.	TR.RS.60.L	TR.RS.60.R	550	900	528	150	65	8.7
65.	–	–	–	–	–	–	–	–
65. (*R 200*)	–	–	–	–	–	–	–	–
70.	TR.RS.70.L	TR.RS.70.R	620	900	545	167	65	9.2
85.	TR.RS.85.L	TR.RS.85.R	670	900	565	167	65	9.5
85. (*R 240*)	–	–	–	–	–	–	–	–
100.	TR.RS.100.L	TR.RS.100.R	580	938	614	167	108	11.5
125.	–	–	–	–	–	–	–	–

Please order matching triflex® R e-chain® separately. 1) Maximum retraction length

Product range | Cover, optional

Ø Index	Optional cover retrofit kit	A [mm]	B [mm]	C [mm]	D [mm]	Load* ≤ [kg]	Weight [kg]
30.	–	–	–	–	–	–	–
40.	TR.RS.40.COVER	101.7	550	567.5	244.6	1.5	2.6
50.	–	–	–	–	–	–	–
60.	TR.RS.60.COVER	170.7	850	880	344.6	3.5	7.2
65.	–	–	–	–	–	–	–
65. (*R 200*)	–	–	–	–	–	–	–
70.	TR.RS.70.COVER	170.7	850	880	344.6	3.5	7.2
85.	TR.RS.85.COVER	170.7	850	880	344.6	3.5	7.2
85. (*R 240*)	–	–	–	–	–	–	–
100.	TR.RS.100.COVER	172	853	910.5	397.6	3.5	7.1
125.	–	–	–	–	–	–	–

*Maximum fill weight to be used with the cover

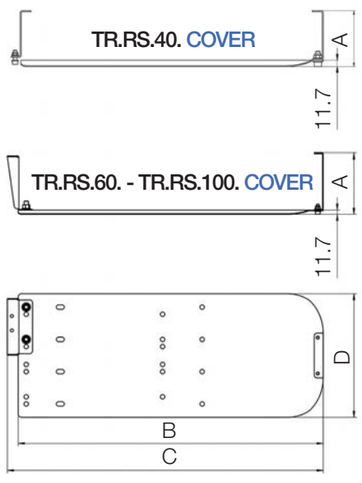

RS retraction system

Installation dimensions

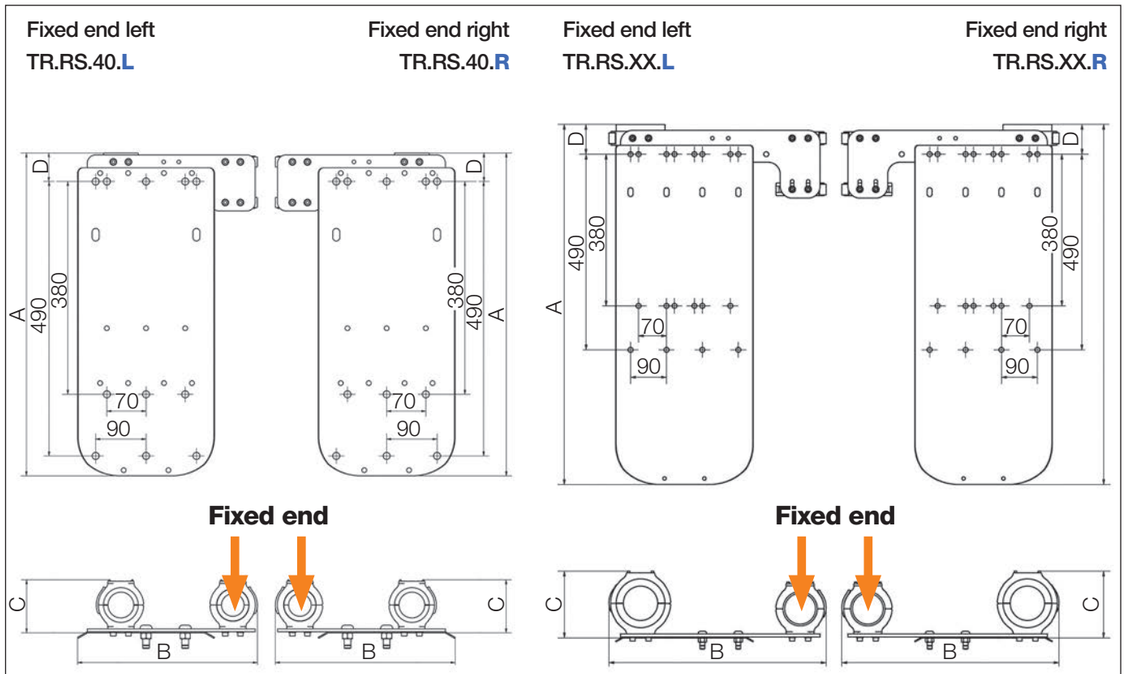

Picture shows triflex® RS ø index: 40

Picture shows triflex® RS ø index: 60 - 100

RS modular retraction system (picture shows the fixed end on the left)

Mounting bracket and gliding feed-through are included.

Please order matching triflex® R e-chain® separately.

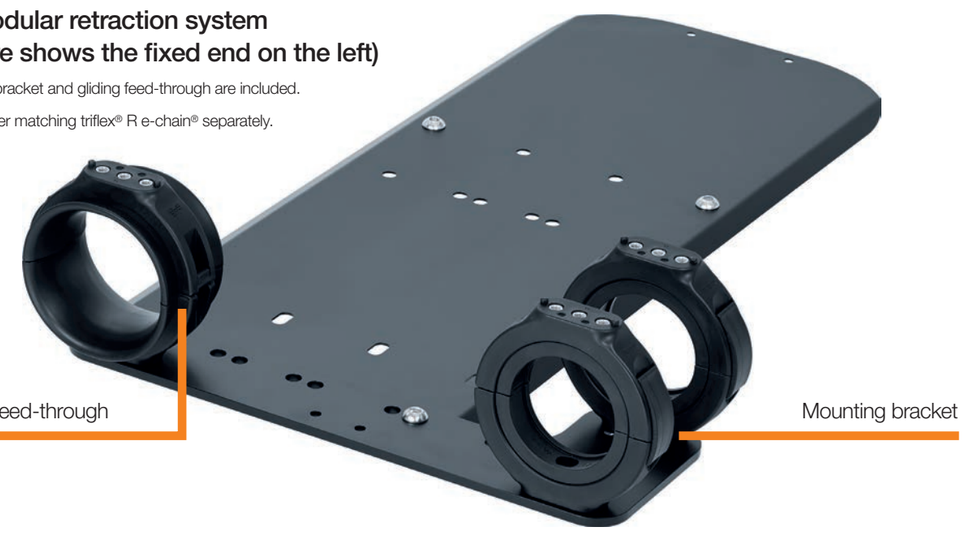

RS e-chains®

Product range

Product range | Matching e-chains® for RS

Ø Index	Part No. **TRC** enclosed	Part No. **TRE** "easy" design
30.	–	–
40.	TRC.RS.40.058. LLLL.0	TRE.RS.40.058. LLLL.0.B
50.	–	–
60.	TRC.RS.60.087. LLLL.0	TRE.RS.60.087. LLLL.0.B
65.	–	–
65. (*R 200*)	–	–
70.	TRC.RS.70.110. LLLL.0	TRE.RS.70.110. LLLL.0.B
85.	TRC.RS.85.135. LLLL.0	TRE.RS.85.135. LLLL.0.B
85. (*R 240*)	–	–
100.	TRC.RS.100.145.LLLL.0	TRE.RS.100.145.LLLL.0.B/C
125.	–	–

1) Available for B- and C-versions

*Standard lengths from the gliding feed-through outside the system - special lengths upon request.

e-chains® standard lengths*

LLLL [mm] | **0500** | **1000** | **1500** | **2000** |

Part No. with **LLLL** standard length value (measured from the gliding feed-through) corresponds to the robot arm length from axis 3. For example: **TRC.RS.60.087.0500.0**

RS e-chains®

Cable length calculation

Calculating the overall e-chain® length | RS e-chains®

Ø Index	Bend radius *R* [mm]	e-chain® length* [mm]	Number of e-chains® links	Overall e-chain® length [mm]
30.	–	–	–	–
40.	058	1251	90	LLLL + 1251
50.	–	–	–	–
60.	087	1734	85	LLLL + 1734
65.	–	–	–	–
65. (*R 200*)	–	–	–	–
70.	110	1895	74	LLLL + 1895
85.	135	2080	68	LLLL + 2080
85. (*R 240*)	–	–	–	–
100.	145	2105	61	LLLL + 2105
125.	–	–	–	–

*Values are related to the e-chain® length within the system

To calculate the overall e-chain® length: Please add the e-chains® length* within the system to the standard length **LLLL** (measured from the gliding feed-through)

Overall e-chain® length =
additional length from the gliding feed-through
LLLL + the e-chain® length within the system

More information and installation height | RS e-chains®

- **TRC series** - enclosed design, chip protection, smooth outer contour ▶ **from page 28**
- **TRE series** - "easy" design, very easy to fill, simply press cables in ▶ **from page 30**